SD4226 OVERVIEW

The SD4226 is a dual-channel, 12-bit, analog-to-digital converter (ADC) supporting sampling rates up to 160MSps. The device uses a multistage pipeline architecture to achieve high signal-to-noise ratio (SNR) and linearity, over wide input signal bandwidth. The SD4226 can be set to operate using either CMOS or LVDS output interface. Programming for configuration and control is accomplished using a 4-wire SPI-compatible serial bus. The digital output data can be programmed to be delivered in offset binary, twos complement format, or gray code.

FEATURES

- SNR: 71.0dBFS at f_{IN} = 70.2MHz and f_S = 160MSps
- SFDR: 83.3dBc at f_{IN} = 70.2MHz and f_S = 160MSps
- -151.0dBFS/Hz input-noise at f_{IN} = 70.2MHz and f_S = 160MSps
- 2.0V nominal input
- Typical power consumption: 486mW at 160MSps
- Integer 1-to-8 input clock divider (1000MHz maximum input rate)
- Sample rates of up to 160MSps
- 1.8V analog supply voltage
- LVDS (ANSI-644 levels) outputs
- Internal ADC voltage reference
- ADC clock duty cycle correction
- Serial port control
- Energy saving power-down modes

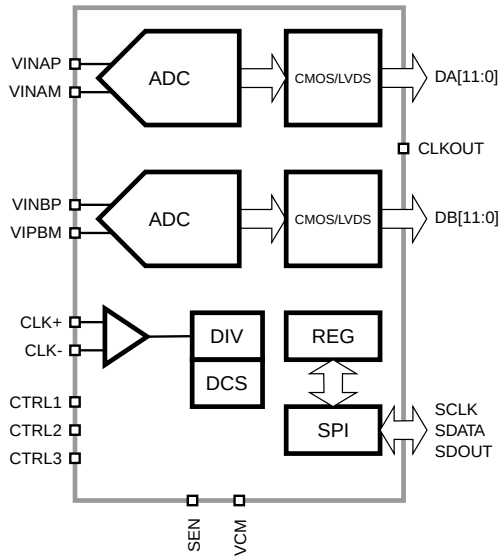

Figure 1: SD4226 Functional Block Diagram.

APPLICATIONS

- Communications
- General-purpose software radios
- I/Q demodulation systems
- Diversity radio systems
- Smart antenna systems
- Multimode digital receivers
- Ultrasound equipment
- Radar/LiDAR applications
- Broadband data applications

Table of Contents

SPECIFICATIONS . . . 1
DC Specifications . . . 1
AC Specifications . . . 2
Digital Specification . . . 3
Switching Specifications . . . 4
Output Modes . . . 5
Output Timing Control . . . 5
ABSOLUTE MAXIMUM RATINGS . . . 6
PACKAGE . . . 7
TYPICAL PERFORMANCE CHARACTERISTICS . . . 11
EQUIVALENT CIRCUITS . . . 13
THEORY OF OPERATION . . . 14
ADC Architecture . . . 14
Stand-by and Power-Down Modes . . . 15
Commonly Used Functions . . . 16
SERIAL PORT INTERFACE . . . 17
OUTPUT MODE . . . 19
Data Scrambler . . . 19
Alternate Bit Polarity . . . 19
Output Test Modes . . . 19
Inverting the Channel Polarity . . . 20
CONTROL REGISTERS . . . 21
ADC BRING-UP . . . 25
Initialization . . . 25
ORDERING INFORMATION . . . 26
PACKAGE DRAWING . . . 27
APPENDIX A: Register Map . . . 28
0x400 - CHIP_TOP . . . 28
0xF00 - ADC_DUAL . . . 31
0xDC0 - ADC A . . . 33
0xCC1 - ADC B . . . 34
REVISION HISTORY . . . 37

SPECIFICATIONS

DC Specifications

At T_A = 25°C, V_{AVDD} = 1.8V, V_{DRVDD} = 1.8V, F_{CLK} = 160MHz, A_{IN} = -1dBFS, differential AC-coupled external clock source, LVDS mode, unless otherwise noted.

Table 1. DC Specifications.

PARAMETER	TEMP	MIN	TYP	MAX	UNIT
Resolution			12		bits
Accuracy					
No Missing Codes	Full		Guaranteed		
Offset Error	Full	-0.50		0.50	%FSR
Gain Error	Full	-8.00		-1.00	%FSR
DNL	Full			±0.5	LSB
INL	Full			±0.8	LSB
Matching					
Offset Error	25°C	-0.80		0.80	%FSR
Gain Error	25°C	-0.50		0.50	%FSR
Temperature Drift					
Offset Error	Full		+/-0.5		ppm/°C
Gain Error	Full		80.0		ppm/°C
Internal Voltage Reference					
Output Voltage	Full	1.02		1.07	V
Input Referred Noise					
V_{REF} = 1.0V	25°C		0.36		LSB(rms)
Analog Input					
Input Span, V_{REF} = 1.0V	Full		2.0		V
Input Capacitance	Full		6.0		pF
Input Resistance	Full		2.0		kΩ
Input Common-Mode Voltage	Full		0.70		V
Input Common-Mode Range	Full	0.62		0.93	V
VCM Voltage	Full		0.63		V
VCM Current Capability	Full		100		µA
Reference Input Resistance	Full		50		kΩ
Power Supply					
V_{AVDD}	Full	1.7	1.8	1.9	V
V_{DRVDD}	Full	1.7	1.8	1.9	V
I_{AVDD} @1.8V	Full		221	285	mA
I_{DRVDD} @1.8V (LVDS)	Full		55	65	mA
Power Consumption					
Sine Wave Input (LVDS)	Full		486		mW
Stand-by[1]	Full		60		mW
Power Down	Full		10.0		mW

[1] Stand-by power is measured with a sinewave input and active clock.

AC Specifications

At T_A = 25°C, V_{AVDD} = 1.8V, V_{DRVDD} = 1.8V, F_{CLK} = 160MHz, A_{IN} = -1dBFS, differential AC-coupled external clock source, High-Performance Calibration Mode enabled, LVDS mode, unless otherwise noted.

Table 2. AC Performance Specifications.

PARAMETER	TEMP	MIN	TYP	MAX	UNIT
Signal-to-Noise Ratio (SNR)					
f_{IN} = 30.2MHz	25°C		71.3		dBFS
f_{IN} = 70.2MHz	25°C		71.0		dBFS
	Full	69.5			dBFS
f_{IN} = 140MHz	25°C		70.2		dBFS
f_{IN} = 220MHz	25°C		68.9		dBFS
Signal-to-Noise and Distortion Ratio (SNDR)					
f_{IN} = 30.2MHz	25°C		70.9		dBFS
f_{IN} = 70.2MHz	25°C		70.6		dBFS
	Full	68.5			dBFS
f_{IN} = 140MHz	25°C		69.7		dBFS
f_{IN} = 220MHz	25°C		68.1		dBFS
Effective Number of Bits (ENOB)					
f_{IN} = 30.2MHz	25°C		11.5		bits
f_{IN} = 70.2MHz	25°C		11.4		bits
f_{IN} = 140MHz	25°C		11.3		bits
f_{IN} = 220MHz	25°C		11.0		bits
Worst 2nd or 3rd Harmonic Power					
f_{IN} = 30.2MHz	25°C		-87.8		dBc
f_{IN} = 70.2MHz	25°C		-87.8	-81.0	dBc
f_{IN} = 140MHz	25°C		-82.0		dBc
f_{IN} = 220MHz	25°C		-76.9		dBc
Worst Non-Harmonic Power					
f_{IN} = 30.2MHz	25°C		-86.3		dBc
f_{IN} = 70.2MHz	25°C		-85.3	-82.0	dBc
f_{IN} = 140MHz	25°C		-82.9		dBc
f_{IN} = 220MHz	25°C		-80.0		dBc
Spurious-Free Dynamic Range[1] (SFDR)					
f_{IN} = 30.2MHz	25°C		84.3		dBc
f_{IN} = 70.2MHz	25°C		83.3		dBc
	Full	80.0			dBc
f_{IN} = 140MHz	25°C		80.9		dBc
f_{IN} = 220MHz	25°C		76.9		dBc
Two-Tone SFDR					
f_{IN1} = 183.0MHz, f_{IN2} = 187.0MHz	25°C		86.2		dBc
Crosstalk[2]	25°C		-105.0		dBc
Analog Input Bandwidth	Full		650.0		MHz

[1] SNR, SNDR and SFDR exclude the DC and $f_S/2$ bins.

[2] Crosstalk is measured at 100MHz with -1.0dBFS on one channel and no input on the alternate channel.

Digital Specification

V_{AVDD} = 1.8V, V_{DRVDD} = 1.8V, F_{CLK} = 160MHz, A_{IN} = -1dBFS, differential AC-coupled external clock source, DCS disabled, unless otherwise noted.

Table 3. Differential Clock Input.

PARAMETER	TEMP	MIN	TYP	MAX	UNIT
Logic Compliance	Full		CMOS/LVDS/LVPECL		
Internal Common-Mode Bias	Full		0.9		V
Differential Input Voltage	Full	0.3		1.2	V_{p-p}
Input Voltage Range	Full	V_{AGND}-0.3		V_{AVDD}+0.2	V
Input Common-Mode Range	Full	0.75		1.05	V
High Level Input Current	Full	-10		10	µA
Low Level Input Current	Full	-10		10	µA
Input Capacitance	Full		1.7		pF
Input Resistance	Full		6.0		kΩ

Table 4. SCLK, SDI, SEN, CTRL1, CTRL2, CTRL3.

PARAMETER	TEMP	MIN	TYP	MAX	UNIT
High Level Input Voltage	Full	1.22			V
Low Level Input Voltage	Full			0.6	V
High Level Input Current	Full	-1		1	µA
Low Level Input Current	Full	-1		1	µA
Input Capacitance	Full		1.5		pF
Input Resistance	Full		100		kΩ

Table 5. CMOS Outputs (CLKOUT and SDOUT).

PARAMETER	TEMP	MIN	TYP	MAX	UNIT
High Level Output Voltage @50µA	Full	1.77			V
High Level Output Voltage @0.5mA	Full	1.75			V
Low Level Output Voltage @50µA	Full			0.05	V
Low Level Output Voltage @1.6mA	Full			0.10	V

Table 6. LVDS Outputs.

PARAMETER	TEMP	MIN	TYP	MAX	UNIT
Differential Output Voltage (V_{OD}), ANSI Mode	Full	250	300	450	mV
Output Offset Voltage (V_{OS}), ANSI Mode	Full	1.10	1.13	1.30	V
Differential Output Voltage (V_{OD}), Reduced Swing	Full	150	220	285	mV
Output Offset Voltage (V_{OS}), Reduced Swing	Full	1.10	1.22	1.30	V

Switching Specifications

V_{AVDD} = 1.8V, V_{DRVDD} = 1.8V, F_{CLK} = 160MHz, A_{IN} = -1dBFS, differential AC-coupled sine wave external clock source, DCS enabled, unless otherwise noted.

Table 7. Clock Input Timing.

PARAMETER	TEMP	MIN	TYP	MAX	UNIT
Input Clock Rate	Full			1000	MHz
Conversion Rate (after clock divider)	Full	20.0		160.0	MHz
CLK Pulse Width High (t_{CH})					
Divide-by-1 Mode, DCS Enabled	Full	1.5			ns
Divide-by-1 Mode, DCS Disabled	Full	3.0	3.1	3.3	ns
Divide-by-2 Mode Through Divide-by-8 Mode	Full	0.6			ns
Aperture Delay (t_A)	Full		0.5		ns
Aperture Uncertainty (Jitter, t_J)	Full		140.0		fs

Table 8. Data Output.

PARAMETER	TEMP	MIN	TYP	MAX	UNIT
CMOS Mode[1]					
Data Propagation Delay (t_{PD})	Full		6.0		ns
DCO Propagation Delay (t_{DCO})	Full		7.0		ns
DCO to Data Skew (t_{SKEW})	Full	-0.9	-0.5	0.0	ns
Pipeline Delay (Latency, L)	Full		35.0		Cycles
LVDS Mode					
Data Propagation Delay (t_{PD})	Full		8.0		ns
DCO Propagation Delay (t_{DCO})	Full		7.7		ns
DCO to Data Skew (t_{SKEW})	Full	-0.9	-0.5	0.0	ns
Pipeline Delay (Latency, L) Channel A/Channel B	Full		32/32.5		Cycles
Wake-Up Time (from sleep)	Full		5.0		µs
Wake-Up Time (from power down)	Full		250.0		µs
Out-of-Range Recovery Time	Full		3		Cycles

[1] Up to 125MHz.

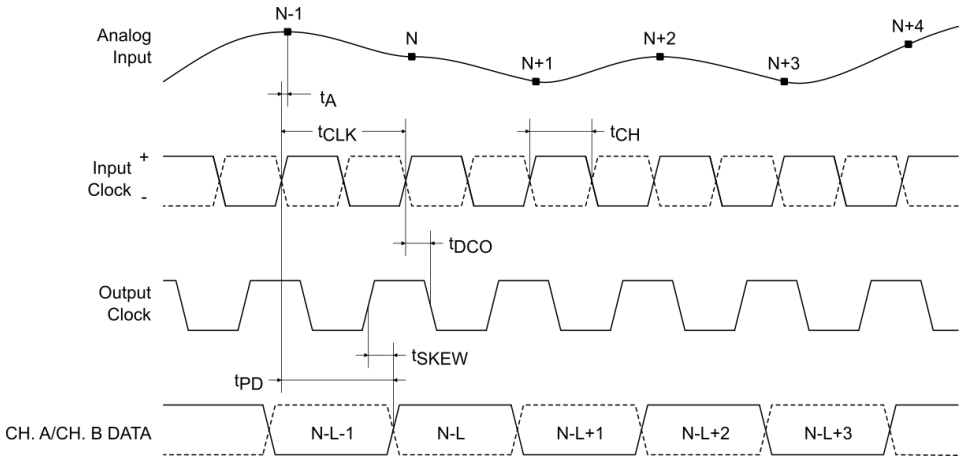

Figure 2: Parallel CMOS Output Mode Timing.

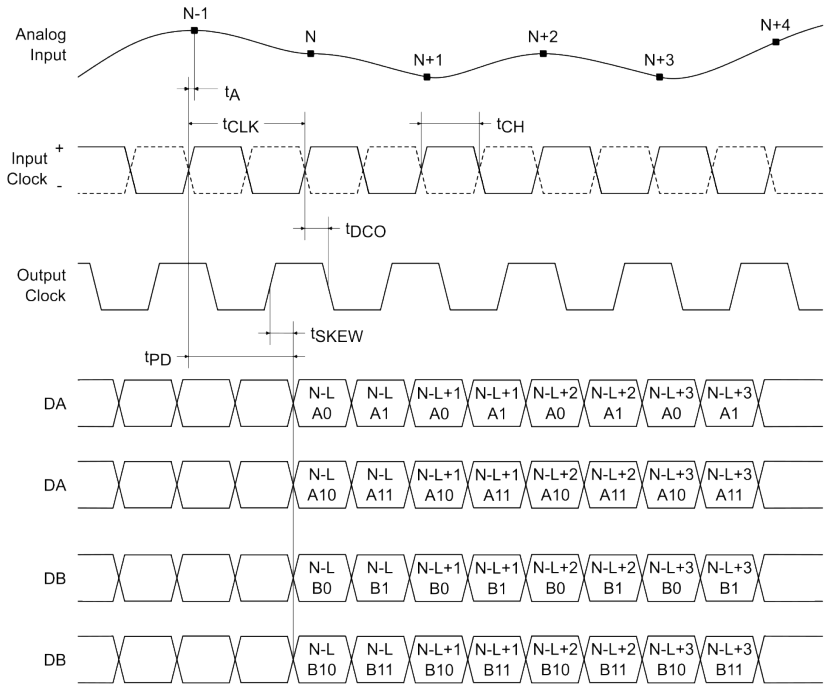

Figure 3: Channel Multiplexed LVDS Output Mode Timing.

Output Modes

The SD4226 supports both CMOS and LVDS interfaces. Two LVDS samples are sent out every clock cycle using both the rising and the falling edge of the output clock. In interleaved parallel mode, the two ADCs share the full set of output pins. The first half-cycle contains ADC A data and the second ADC B data.

Output Timing Control

Data delay control, bits [8:5], in register *0x473*, can be used to move the CMOS data relative to output clock. Bit [9] inverts the internal clock sending the data out. Bits [13:10], in register *0x473*, control the output clock delay relative to output data, while bit [14] inverts the clock. The delay step size is about 250ps.

Data delay control is not available in interleaved or multiplexed output mode.

Driving long traces or large load capacitance with CMOS output produces voltage ripple in the digital IO supply and ground, which may couple on chip to the sensitive analog circuits in the ADC and degrade the performance. This effect can be reduced by using an external buffer IC. The use of LVDS output interface largely eliminates issues with IO supply noise.

ABSOLUTE MAXIMUM RATINGS

Table 9. Absolute Maximum Ratings (T_A = 25°C, unless otherwise specified).

Parameter	Symbol	Conditions	Min	Max	Units
AVDD	V_{AVDD}	Relative to AGND	-0.3	2.0	V
DRVDD	V_{DRVDD}	Relative to AGND	-0.3	2.0	V
VINAP/VINBP, VINAM/VINBM		Relative to AGND	-0.3	2.0	V
CLK+, CLK-		Relative to AGND	-0.3	2.0	V
CTRL1, CTRL2 and CTRL3		Relative to AGND	-0.3	2.0	V
VCM		Relative to AGND	-0.3	2.0	V
CSB		Relative to AGND	-0.3	2.0	V
SCLK		Relative to AGND	-0.3	2.0	V
SDI		Relative to AGND	-0.3	2.0	V
SDO		Relative to AGND	-0.3	2.0	V
DA0, ..., DA11 DB0, ..., DB11		Relative to AGND	-0.3	2.0	V
Operating Temperature Range (Ambient)			-40	85	°C
Maximum Junction Temperature Under Bias				125	
Storage Temperature Range (Ambient)			-65	150	

Notes:

1. Stresses beyond those listed under Table 9 may cause permanent damage to the device. These are stress ratings only and functional operation of the device at these or any other conditions beyond those indicated under recommended operating conditions is not implied. Exposure to absolute-maximum-rated conditions for extended periods may affect device reliability.

ESD CAUTION.

	Electrostatic Discharge Sensitive Device. Proper ESD precautions should be observed to prevent performance degradation or loss of functionality.

PACKAGE

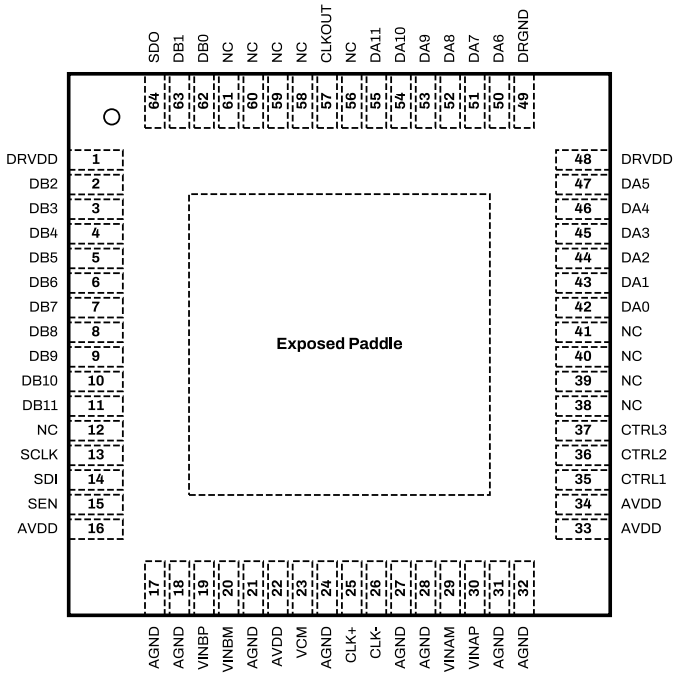

Figure 4: SD4226 Package Top View for Parallel CMOS Configuration.

1. The exposed thermal pad on the bottom of the package provides the analog ground for the part and must be connected for proper operation.

Table 10. Pin Descriptions for Parallel CMOS Configuration.

Number	Name	Type	Comment
0	AGND	Ground	Exposed Paddle, Analog Ground.
1, 48	DRVDD	Power	Digital I/O Supply.
2	DB2	Output	Channel B CMOS Output Data 2.
3	DB3	Output	Channel B CMOS Output Data 3.
4	DB4	Output	Channel B CMOS Output Data 4.
5	DB5	Output	Channel B CMOS Output Data 5.
6	DB6	Output	Channel B CMOS Output Data 6.
7	DB7	Output	Channel B CMOS Output Data 7.
8	DB8	Output	Channel B CMOS Output Data 8.
9	DB9	Output	Channel B CMOS Output Data 9.
10	DB10	Output	Channel B CMOS Output Data 10.
11	DB11	Output	Channel B CMOS Output Data 11.
12, 38, 39, 40, 41, 56, 58, 59, 60, 61	NC		Do not connect.
13	SCLK	Input	Serial interface clock input.

Number	Name	Type	Comment
14	SDI	Input	In Serial Programming Mode, (PAR/SER = 0V), SDI Is the Serial Interface Data Input. Data on SDI is clocked into the mode control registers on the rising edge of SCK. In the parallel programming mode (PAR/ SER = VDD), SDI can be used together with SDO to power down the part.
15	SEN	Input	Serial interface enable input.
16, 22, 33, 34	AVDD	Power	Analog Power Supply (1.8 V Nominal).
17, 18, 21, 24, 27, 28, 31, 32	AGND	Ground	Analog Ground. The exposed thermal paddle on the bottom of the package provides the analog ground for the part. The exposed paddle must be connected to ground for proper operation.
19	VINBP	Input	Differential Analog Input Pin (Plus) for Channel B.
20	VINBM	Input	Differential Analog Input Pin (Minus) for Channel B.
23	VCM	Output	This pin outputs the common-mode voltage that can be used externally to bias the analog input pins.
25	CLK+	Input	ADC Clock Input (Plus).
26	CLK-	Input	ADC Clock Input (Minus).
29	VINAM	Input	Differential Analog Input Pin (Minus) for Channel A.
30	VINAP	Input	Differential Analog Input Pin (Plus) for Channel A.
35	CTRL1	Input	Digital control input pin. It controls various power-down modes.
36	CTRL2	Input	Digital control input pin. It controls various power-down modes.
37	CTRL3	Input	Digital control input pin. It controls various power-down modes.
42	DA0	Output	Channel A CMOS Output Data 0 (LSB).
43	DA1	Output	Channel A CMOS Output Data 1.
44	DA2	Output	Channel A CMOS Output Data 2.
45	DA3	Output	Channel A CMOS Output Data 3.
46	DA4	Output	Channel A CMOS Output Data 4.
47	DA5	Output	Channel A CMOS Output Data 5.
49	DRGND	Ground	Digital I/O Ground. The exposed pad is connected to DRGND.
50	DA6	Output	Channel A CMOS Output Data 6.
51	DA7	Output	Channel A CMOS Output Data 7.
52	DA8	Output	Channel A CMOS Output Data 8.
53	DA9	Output	Channel A CMOS Output Data 9.
54	DA10	Output	Channel A CMOS Output Data 10.
55	DA11	Output	Channel A CMOS Output Data 11.
57	CLKOUT	Output	Data Output Clock.
62	DB0	Output	Channel B CMOS Output Data 0 (LSB).
63	DB1	Output	Channel B CMOS Output Data 1.
64	SDO	Output	In Serial Programming Mode, (PAR/SER = 0V), SDO is the Optional Serial Interface Data Output. In the parallel programming mode (PAR/SER = VDD), SDO can be used together with SDI to power down the part.

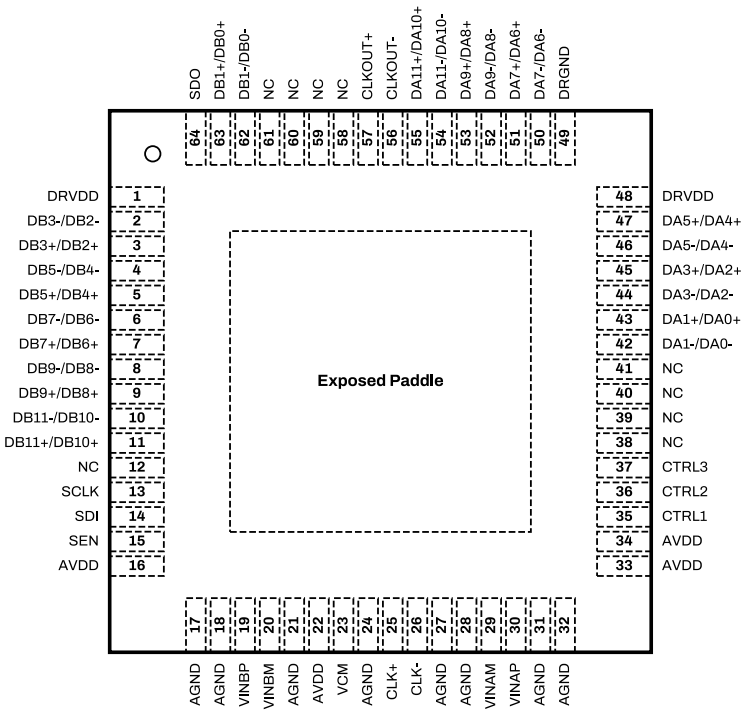

Figure 5: SD4226 Package Top View for Channel Multiplexed LVDS Configuration.

1. The exposed thermal pad on the bottom of the package provides the analog ground for the part and must be connected for proper operation.

Table 11. Pin Descriptions for Channel Multiplexed LVDS Configuration.

Number	Name	Type	Comment
0	AGND	Ground	Exposed Paddle, Analog Ground.
1, 48	DRVDD	Power	Digital I/O Supply.
2	DB3-/DB2-	Output	Channel B LVDS Output Data 2 and 3 (Minus).
3	DB3+/DB2+	Output	Channel B LVDS Output Data 2 and 3 (Plus).
4	DB5-/DB4-	Output	Channel B LVDS Output Data 4 and 5 (Minus).
5	DB5+/DB4+	Output	Channel B LVDS Output Data 4 and 5 (Plus).
6	DB7-/DB6-	Output	Channel B LVDS Output Data 6 and 7 (Minus).
7	DB7+/DB6+	Output	Channel B LVDS Output Data 6 and 7 (Plus).
8	DB9-/DB8-	Output	Channel B LVDS Output Data 8 and 9 (Minus).
9	DB9+/DB8+	Output	Channel B LVDS Output Data 8 and 9 (Plus).
10	DB11-/DB10-	Output	Channel B LVDS Output Data 10 and 11 (Minus).
11	DB11+/DB10+	Output	Channel B LVDS Output Data 10 and 11 (Plus).
12, 38, 39, 40, 41, 58, 59, 60, 61	NC		Do not connect.
13	SCLK	Input	Serial interface clock input.
14	SDI	Input	In Serial Programming Mode, (PAR/SER = 0V), SDI Is the Serial Interface Data Input. Data on SDI is clocked into the mode control registers on the rising edge of SCK. In the parallel programming mode (PAR/ SER = VDD), SDI can be used together with SDO to power down the part.

Number	Name	Type	Comment
15	SEN	Input	Serial interface enable input.
16, 22, 33, 34	AVDD	Power	Analog Power Supply (1.8 V Nominal).
17, 18, 21, 24, 27, 28, 31, 32	AGND	Ground	Analog Ground. The exposed thermal paddle on the bottom of the package provides the analog ground for the part. The exposed paddle must be connected to ground for proper operation.
19	VINBP	Input	Differential Analog Input Pin (Plus) for Channel B.
20	VINBM	Input	Differential Analog Input Pin (Minus) for Channel B.
23	VCM	Output	This pin outputs the common-mode voltage that can be used externally to bias the analog input pins.
25	CLK+	Input	ADC Clock Input (Plus).
26	CLK-	Input	ADC Clock Input (Minus).
29	VINAM	Input	Differential Analog Input Pin (Minus) for Channel A.
30	VINAP	Input	Differential Analog Input Pin (Plus) for Channel A.
35	CTRL1	Input	Digital control input pin. It controls various power-down modes.
36	CTRL2	Input	Digital control input pin. It controls various power-down modes.
37	CTRL3	Input	Digital control input pin. It controls various power-down modes.
42	DA1-/DA0-	Output	Channel A LVDS Output Data 0 and 1 (Minus).
43	DA1+/DA0+	Output	Channel A LVDS Output Data 0 and 1 (Plus).
44	DA3-/DA2-	Output	Channel A LVDS Output Data 2 and 3 (Minus).
45	DA3+/DA2+	Output	Channel A LVDS Output Data 2 and 3 (Plus).
46	DA5-/DA4-	Output	Channel A LVDS Output Data 4 and 5 (Minus).
47	DA5+/DA4+	Output	Channel A LVDS Output Data 4 and 5 (Plus).
49	DRGND	Ground	Digital I/O Ground. The exposed pad is connected to DRGND.
50	DA7-/DA6-	Output	Channel A LVDS Output Data 6 and 7 (Minus).
51	DA7+/DA6+	Output	Channel A LVDS Output Data 6 and 7 (Plus).
52	DA9-/DA8-	Output	Channel A LVDS Output Data 8 and 9 (Minus).
53	DA9+/DA8+	Output	Channel A LVDS Output Data 8 and 9 (Plus).
54	DA11-/DA10-	Output	Channel A LVDS Output Data 10 and 11 (Minus).
55	DA11+/DA10+	Output	Channel A LVDS Output Data 10 and 11 (Plus).
56	CLKOUT-	Output	Inverted Version of CLKOUT+.
57	CLKOUT+	Output	Data Output Clock.
62	DB1-/DB0-	Output	Channel B LVDS Output Data 0 and 1 (Minus).
63	DB1+/DB0+	Output	Channel B LVDS Output Data 0 and 1 (Plus).
64	SDO	Output	In Serial Programming Mode, (PAR/SER = 0V), SDO is the Optional Serial Interface Data Output. In the parallel programming mode (PAR/SER = VDD), SDO can be used together with SDI to power down the part.

TYPICAL PERFORMANCE CHARACTERISTICS

At T_A = 25°C, V_{AVDD} = 1.8V, V_{DRVDD} = 1.8V, F_{CLK} = 160MHz, A_{IN} = -1dBFS, differential AC-coupled clock source, High-Performance Calibration Mode enabled, LVDS mode, unless otherwise noted.

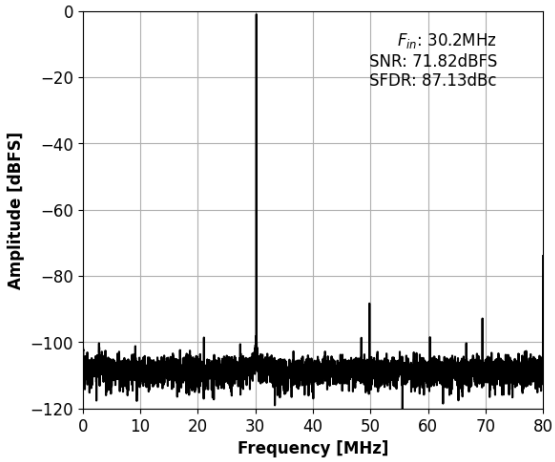

Figure 6: Single-Tone FFT with f_{IN}=30.2MHz.

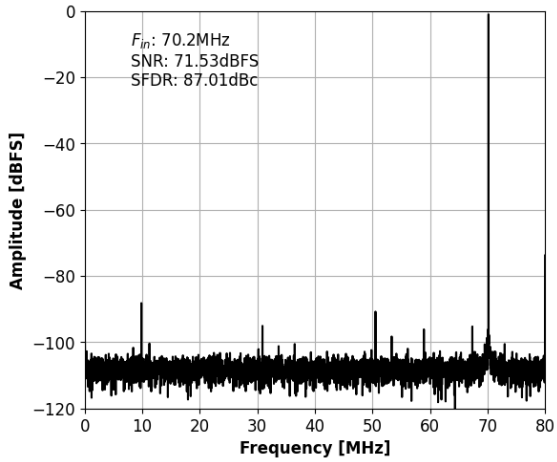

Figure 7: Single-Tone FFT with f_{IN}=70.2MHz.

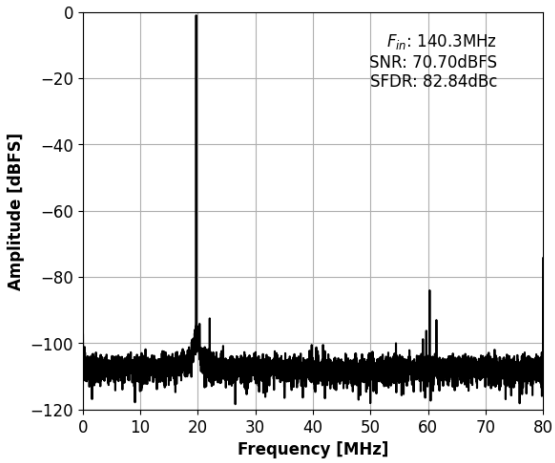

Figure 8: Single-Tone FFT with f_{IN}=140MHz.

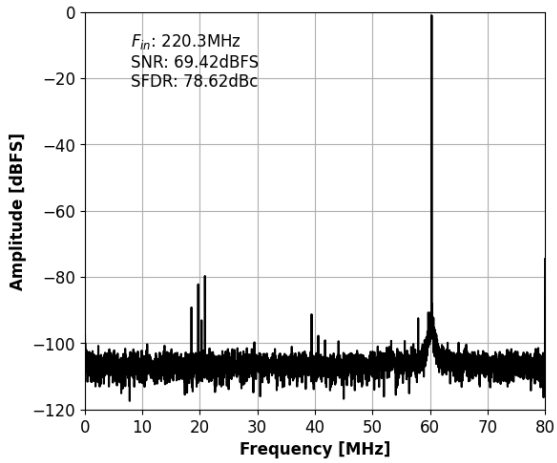

Figure 9: Single-Tone FFT with f_{IN}=220MHz.

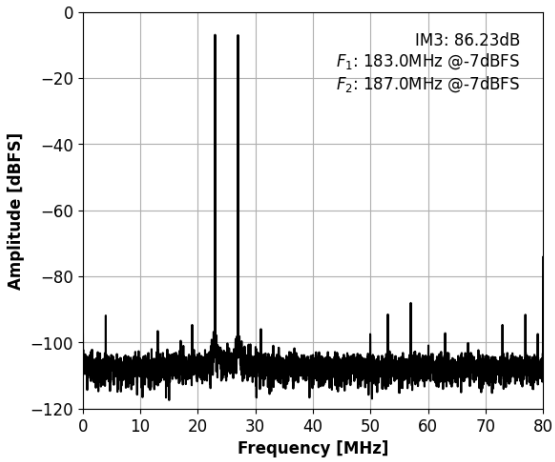

Figure 10: Two-Tone FFT with f_{IN1}=183.0MHz, f_{IN2}=187.0MHz.

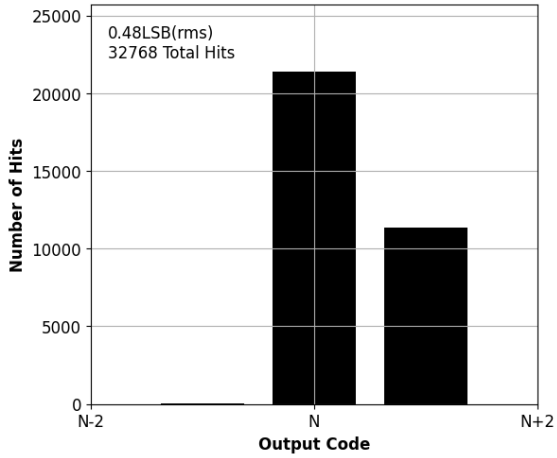

Figure 11: Grounded Input Histogram.

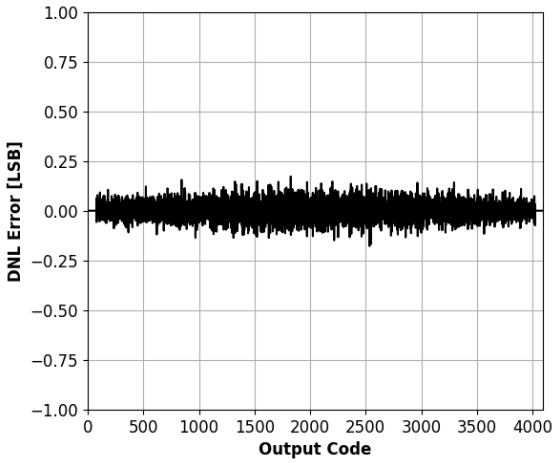

Figure 12: DNL Error with f_{IN}=6.55MHz.

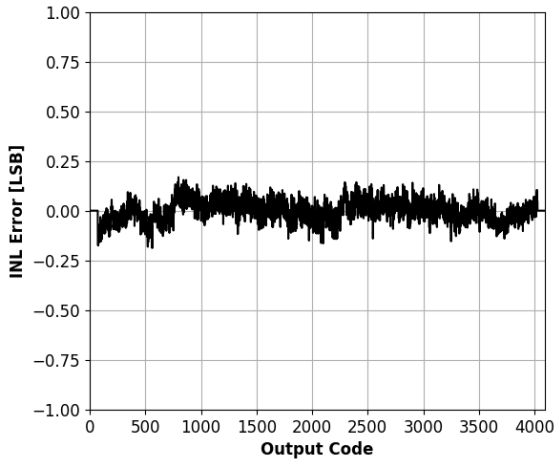

Figure 13: INL Error with f_{IN}=6.55MHz.

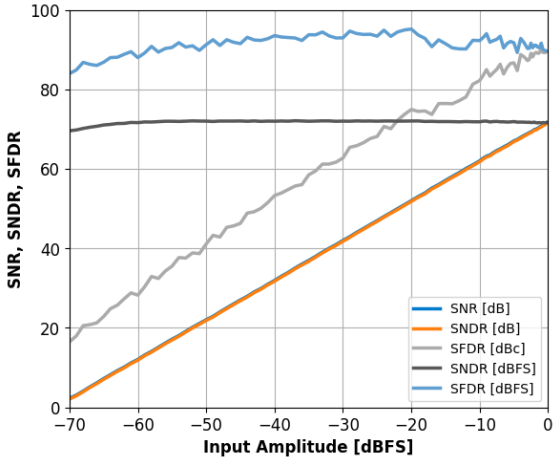

Figure 14: Single-Tone SNR, SNDR and SFDR vs. Input Amplitude with f_{IN}=70.25MHz.

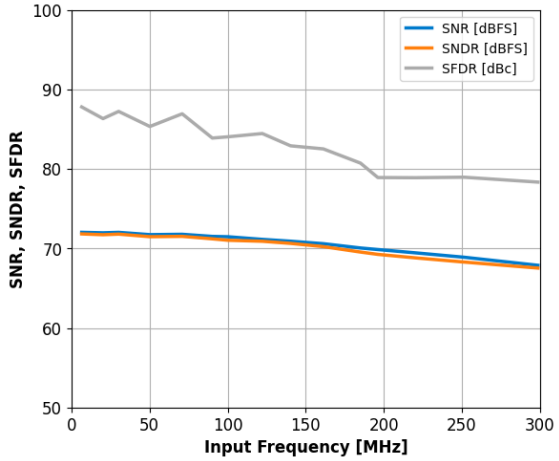

Figure 15: Single-Tone SNR, SNDR and SFDR vs. Input Frequency with f_S=160MHz.

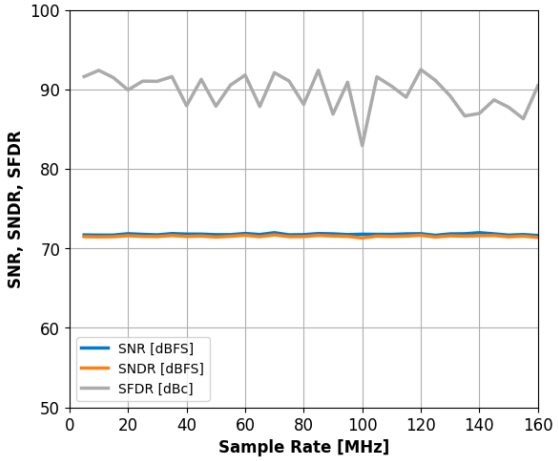

Figure 16: Single-Tone SNR, SNDR and SFDR vs. Sample Rate with f_{IN}=70.25MHz.

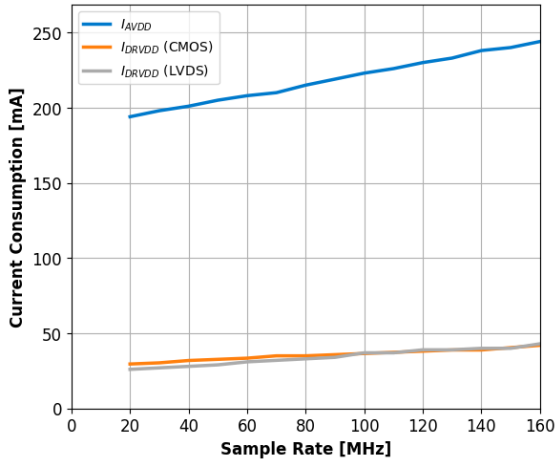

Figure 17: Current vs. Sample Rate.

EQUIVALENT CIRCUITS

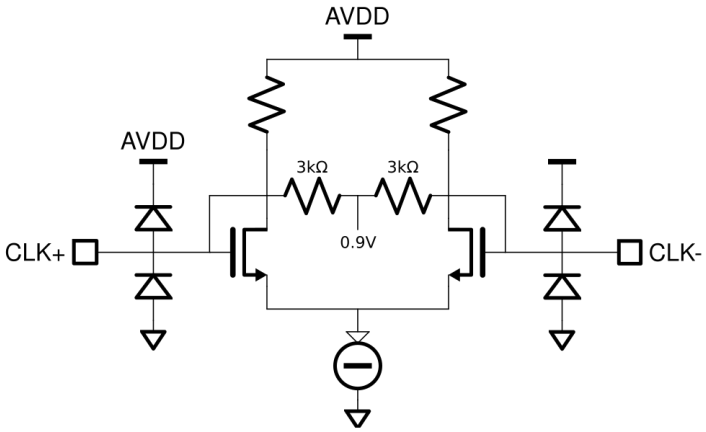

Figure 18: Equivalent Clock Input Circuit.

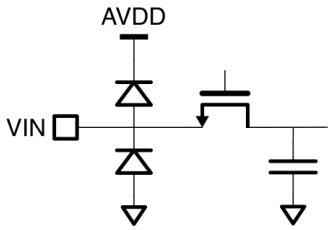

Figure 19: Equivalent Analog Input Circuit.

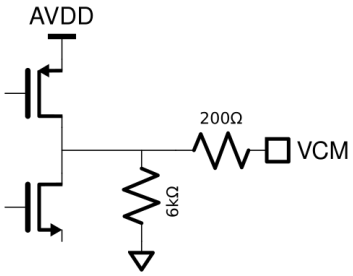

Figure 20: Equivalent VCM Circuit.

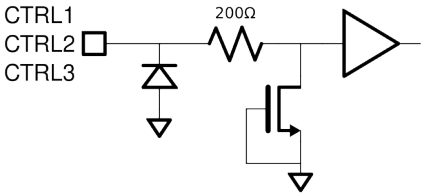

Figure 21: Equivalent CTRL1, CTRL2 and CTRL3 Input Circuit.

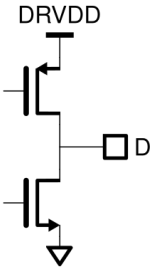

Figure 22: Equivalent Digital Output Circuit.

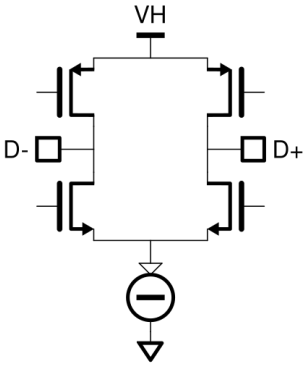

Figure 23: Equivalent LVDS output Circuit.

THEORY OF OPERATION

ADC Architecture

The ADC uses a pipelined architecture and innovative patented switched-capacitor circuits. Its fully differential design provides exceptional immunity to power supply noise and minimizes reference voltage self-modulation. A built-in Sample-and-Hold (S/H) function is integrated into the input stage of the pipeline structure.

Analog Input

The input stage of the ADC behaves as a switched-capacitor network, presenting itself to the driving circuit as a combination of a switch and a sampling capacitor. The capacitor is reset prior to each conversion cycle, effectively eliminating non-linear memory effects commonly observed in some pipelined ADC architectures. The ADC does not include an internal common-mode bias therefore, the driving source must provide an appropiate common-mode voltage.

Differential Clock Input

The SD4226 features a differential clock receiver with an integrated common-mode bias. For proper operation, the clock inputs should be AC-coupled using 10nF capacitors.

Differential Clock Configuration. For optimal jitter performance, a differential clock source is recommended. The differential clock signals to CLK+ and CLK- should be connected through a 10nF AC-coupling capacitors.

Single-Ended Clock Configuration. If a single-ended clock source is used, the signal source should be AC-coupled to the CLK+ pin. In this configuration, a 10nF capacitor should be connected between the CLK- pin and analog ground to maintain proper biasing.

Clock Jitter Considerations. Clock jitter has a significant impact on the ADC's signal-to-noise ratio (SNR). The sensitivity to jitter increases with input signal frequency. For best performance, a low-noise differential clock with fast edge transitions should be used.

Note: The part can enter in manufacturing test mode if both differential clock inputs are held low for more than 1ms. This behavior can be prevented by writing 1 to register *0x4cf*, bit[15].

Clock Divider

The ADC includes a programmable clock divider that allows the input clock to be divided by integer values from 2 to 8. The divider is configured by setting register *0x463*, bits [7:5], to the desired division value. A value of 0 (default) bypasses the divider entirely.

By default, the divider starts asynchronously.

Clock Duty-Cycle Requirements. The ADC utilizes both the rising and falling edges of the input clock (or the divided clock, if the divider is enabled) for internal sampling operations. To achieve optimal performance, especially at the maximum sampling rate, the clock duty cycle should be as close to 50% as possible.

When the divider is enabled with an even divisor, a 50% duty cycle is guaranteed by design. If the application uses a clock with a non-ideal duty cycle, a Duty Cycle Stabilizer (DCS) can be enabled to improve performance.

ADC Self-Calibration

The ADC includes an automatic calibration mechanism that is executed at power-up to ensure optimal performance. It calibrates out capacitor mismatch and the effects of operational amplifier finite gain and bandwidth. For best results, calibration should be performed at the actual sampling rate used during operation. To support this, the device continuously monitors the sampling clock frequency and automatically re-triggers calibration if a significant change is detected. This feature can be disabled by setting register *0x4c9*, bit[0], to 1.

Manual calibration can also be initiated by toggling both *0xdc1*, bit[4] and *0xcc1*, bit[4] from 0 to 1. The calibration process is implemented using a state-machine architecture, ensuring a deterministic and predictable calibration time. By default the

calibration takes 46 million ADC sampling clock cycles. Calibration completion status can be read from *0xdef*, bit[0], for the first ADC and *0xcef*, bit[0], for the second ADC after the status readback is enabled by writing 0x1c to both *0xdeb* and *0xceb*. Bit value 1 indicates that calibration is complete.

In addition, the ADC supports a Background Calibration (BGC) mode, which is disabled by default. When enabled, parameters for compensating changes in operational amplifier gain and bandwidth are continuously updated. BGC is beneficial in environments with large temperature variations near the hot end of the specified operating temperature range. For its operation, BGC uses a dither signal which is injected into the ADC input signal path. This dither consumes approximately 0.8dB of the ADC's input range, resulting in earlier clipping compared to when BGC is disabled. When BGC is enabled calibration completion status bit remains 0.

To enable BGC:

- Write 0b01 to register 0xde1, bits [15:14]
- Write 0b01 to register 0xce1, bits [15:14]
- Write 0x0d80 to register 0xdcf
- Write 0x0d80 to register 0xccf
- Write 0b0 to register 0xde3, bit [3]
- Write 0b0 to register 0xce3, bit [3]

Calibration parameters can be altered to optimize ADC performance and the duration of the calibration according to Table 12.

High Performance settings improve the low frequency SFDR compared to the default settings while the High Speed Settings minimize the calibration time at the cost of small SFDR and SNDR degradation. If the parameters are altered, the calibration has to be reinitiated as described earlier.

Table 12. Calibration Settings.

Register Address	Default Value	High Performance Value	High Speed Value
0xccd	*0x1483*	*0x3483*	*0x348c*
0xcd5	*0x1483*	*0x3483*	*0x348c*
0xcdd	*0x16c3*	*0x36c3*	*0x36cc*
0xce1	*0xbbe8*	*0xbb80*	*0xbb20*
0xdcd	*0x1483*	*0x3483*	*0x348c*
0xdd5	*0x1483*	*0x3483*	*0x348c*
0xddd	*0x16c3*	*0x36c3*	*0x36cc*
0xde1	*0xbbe8*	*0xbb80*	*0xbb20*
Duration (clock cycles)	46M	25M	6.3M

Stand-by and Power-Down Modes

The SD4226 supports two power-saving modes, power down and stand-by, that can be used when the ADCs are not actively sampling. In both modes, the SPI interface (if enabled) remains operational.

Power-Down Mode. The SD4226 can be placed in power-down mode either by setting register *0x457*, bit[7], to 1, or by configuring the control pins as follows: *CTRL1* = 1, *CTRL2* = 0, and *CTRL3* = 0. In this mode, the entire device, including the ADCs, internal reference, and output buffers, is disabled, resulting in significantly reduced overall power consumption.

Stand-by Mode. Stand-by mode offers a faster wake-up time compared to power-down mode, at the cost of slightly higher residual current. It is suitable for applications that require rapid recovery from idle states. To enable stand-by mode, set register *0x457*, bit [8], to 1.

The SD4226 can be placed in stand-by mode by setting the control pins to: *CTRL1* = 1, *CTRL2* = 0, and *CTRL3* = 1.

Note: It is recommended to disable the ADC auto-calibration when using stand-by mode to avoid unintended calibration

cycles during transitions.

Commonly Used Functions

The SD4226 uses pins *CTRL1*, *CTRL2*, and *CTRL3* to set various operating modes.

Table 13. CTRL1, CTRL2, and CTRL3.

CTRL1	CTRL2	CTRL3	Function
0	0	0	Normal Operation.
1	0	0	Power-Down.
1	0	1	Stand-by.

Duty-Cycle Stabilizer. The Duty-Cycle Stabilizer (DCS) retimes the falling edge of the clock thus providing an internal clock signal with a 50% duty cycle. The DCS is useful in systems where the input clock has an uneven duty cycle. It can be enabled via register control, by setting register *0x457*, bit[1], to 1.

Output Enable (active-low, **OEB**). The output data drivers can be placed in a high-impedance state using the OEB function, accessed by setting register *0x457*, bit[3], to 1.

Common-Mode Voltage. The VCM pin outputs the analog input common-mode bias voltage (VCM). This pin provides a stable DC reference that can be used to set the ADC input common-mode level, either directly through a passive network or indirectly as the common-mode reference for a driving amplifier. In typical applications, the default common-mode voltage is suitable and requires no adjustment. The common-mode voltage level is programmable through register *0xf11*, bits [4:3].

Overrange Indicator. This output bit indicates that the analog input sample exceeded the converter's full-scale input range. When the input signal exceeds the converter's positive (or negative) full-scale range, the ADC will clip, and the output data will saturate to the maximum (or minimum) digital code. In either case, the OR bit will be set, indicating that the input had been out of range during that sample.

Internal Reference Voltage

The internal vref can be adjusted with *0x45d* bits [4:1]. Usually, the default value yields the optimal performance.

SERIAL PORT INTERFACE

The SD4226 uses a 4-wire Serial Port Interface (SPI) that gives the user flexibility to configure the converter for specific functions, depending on the application, through a register space provided inside the ADC. The interface signals are:

- SCLK: defines the bit rate at which serial data is driven onto, and sampled from, the bus;
- CSB: defines the boundaries of a basic data 'unit', comprised of multiple serial bits;
- SDI: is the serial data input wire;
- SDO: is the serial data output wire;

The read and write cycles are described in the figure below. The address space is 13 bits long (A<12:0>) and the data is 16 bits wide (D<15:0>). The complete instruction cycle is 32-bits long. The falling edge of CSB combines with the rising edge of SCLK marks the start of the instruction cycle. On a write transaction, the target register is updated on the falling edge of SCLK.

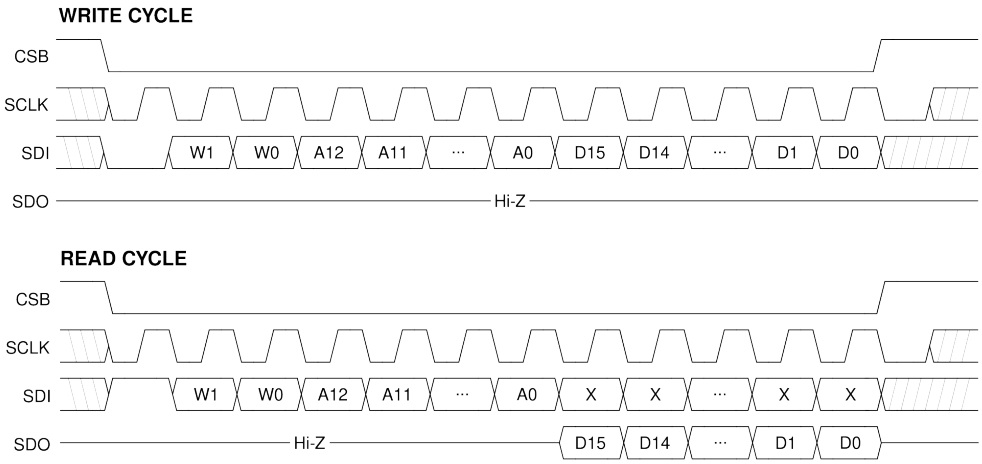

Figure 24: 4-wire SPI timing.

Table 14. SPI Timing.

PARAMETER	TEMP	MIN	TYP	MAX	UNIT
Setup time between the data and the rising edge of SCLK	t_{DS}	2			ns
Hold time between the data and the rising edge of SCLK	t_{HD}	2			ns
Period of the SCLK	t_{SCLK}	40			ns
Setup time between CSB and SCLK	$t_{S,CSB\text{-}SCLK}$	2			ns
Hold time between CSB and SCLK	$t_{H,CSB\text{-}SCLK}$	2			ns
Minimum period that SCLK should be in a logic high state	$t_{SCLK,high}$	10			ns
Minimum period that SCLK should be in a logic high state	$t_{SCLK,low}$	10			ns

Two bits, W1 and W0, determine how many bytes of data that can be transferred in the same write cycle (see Table 15). If more than 16 bits (2 Bytes) of data are being transferred the address is increased sequentially.

Table 15. SPI Word Length.

[W1,W0]	Data length
00	Not supported
01	Two bytes of data can be transferred
10	Not supported
11	Four bytes of data can be transferred

The SPI pins should not be active when the full dynamic performance of the ADC is required. Noise from SCLK, CSB and the data transactions can degrade ADC performance.

OUTPUT MODE

Data Scrambler

Interference originating from the digital outputs of the ADC can be difficult to eliminate entirely. Such interference may result from capacitive or inductive coupling mechanisms, or from shared impedance paths in the ground plane. Even minimal coupling coefficients can introduce deterministic spurious tones into the ADC's output frequency spectrum. To mitigate this, digital output scrambling techniques can be employed prior to off-chip transmission. By randomizing the bit patterns, the spectral energy of these spurs is dispersed, effectively reducing their peak amplitudes and minimizing their impact on signal integrity.

The SD4226 can apply an exclusive-OR logic operation between the LSB and all other data output bits, while the LSB, overflow and clock outputs are not affected.

When this function is used, the receiver must apply the same function to unscramble the received data.

The data scrambler is enabled by setting control register *0x4b5*, bit[13], to 1.

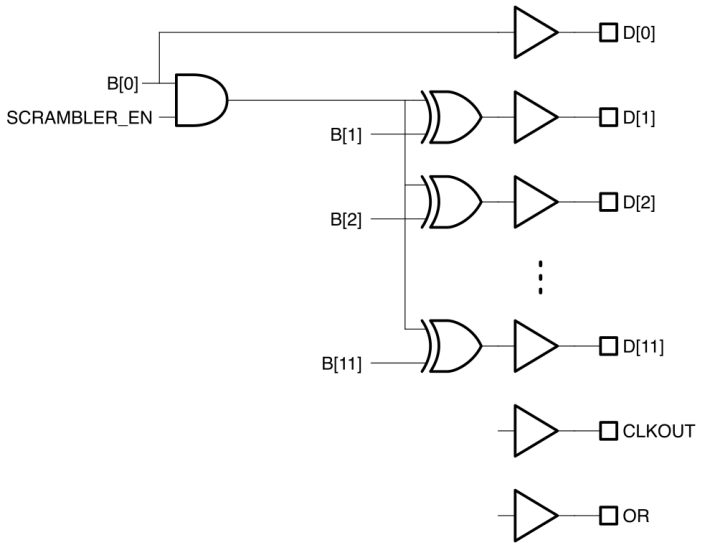

Figure 25: SD4226 Data Scrambler.

Alternate Bit Polarity

The alternate bit polarity is particularly effective to suppress digital feedback and minimize noise coupling on the PCB when the ADC input signal is near mid-scale and of very small amplitude. In this case, the digital output tends to toggle between patterns dominated by either logic high or logic low states. This synchronized switching of multiple bits can induce significant transient currents in the ground plane, leading to increased digital noise. This mode, when activated, inverts all odd-numbered data output bits prior to the output buffer stage while even-numbered bits, along with the overflow and clock output, remain unaffected thus ensuring that approximately half of the output bits transition are high while the other half transition are low. This balanced switching behavior helps cancel out opposing current flows in the ground return path, thereby reducing overall ground noise. At the receiving end, the original data can be reconstructed by inverting the same odd-numbered bits. This mode operates independently of the digital output randomization feature, both functions can be enabled or disabled separately. The Alternate Bit Polarity mode is configured via serial programming of control register *0x4b5*, bit[14].

Output Test Modes

The output test options are described in Table 16 and are selected via SPI programming at register *0x4b5*, bits [5:2].

When an output test mode is enabled, the analog section of the ADC is disconnected from the digital back-end blocks and the test pattern is run through the output formatting block. These tests require an active input clock.

There are two pseudo-random number generators available, PN23 and PN9. The PN23 generator ($X^{23}+X^{18}+1$), selected by register *0x4b5*, bits [5:2], set to 0x5, can be reset by setting register *0x4b5*, bit [12], low; while the PN9 generator ($X^{9}+X^{5}+1$), selected by register *0x4b5* set to 0x6, can be reset by setting register *0x4b5*, bit [11], low.

Table 16. Output Test Modes.

Mode	Function
0	Pass-Through
1	Midscale
2	+FS
3	-FS
4	Checkerboard
5	PN23
6	PN9
7	1/0 word toggle
8	User input
9	1/0 bit toggle
10	Unused
11	1-bit high
12	Mixed frequency
13	Unused
14	Unused
15	Ramp

Pass-through and test patterns 1, 2, 3, 5 and 6 are subject to output formatting, while the other test modes are not. Test patterns 1 to 8 and 15 can be applied to either one channel or both channels using *0x4b5*, bit[7:6]. Patterns 4 and 7 can be toggled between the pattern and its inverse while test pattern 8 can be selected using registers *0x4bb*, *0x4bd*, *0x4bf* and *0x4c1*.

Inverting the Channel Polarity

The following writes must be executed in order and after the sampling clock is asserted:

Table 17. Output Polarity Inversion (ADC_A only).

Register	Value
0x0807	0x0101
0x0813	0x58AB
0x082B	0x0001
0x082B	0x0000
0x0807	0x0100
0x0813	0x58EB

CONTROL REGISTERS

This section describes the most commonly used control registers. For a description of the complete register map, refer to Appendix A: Register Map.

Each register is presented in the following format:

Address: <HEX value>		**RW** or **RO**	**Default: <HEX value>**
bit field	default value	field description.	

Notes

- **RW** = Read/Write
- **RO** = Read-Only
- For read-only registers, the default value is omitted.
- Registers not listed in these tables should not be written.

When updating control register values, always use a read-modify-write procedure. Some registers include reserved bit fields for internal engineering purposes. This approach ensures that these reserved bits remain unchanged and prevents unintended modifications.

CHIP TOP:

Address: 0x457		**RW**	**Default: 0x0015**
[0]	0x1	Duty Cycle Stabilizer enable (see Duty-Cycle Stabilizer). 0: Disable 1: Enable	
[1]	0x0	Duty Cycle Stabilizer on/off in SPI mode (see Duty-Cycle Stabilizer). 0: Off 1: On	
[6:2]	0x5	Reserved.	
[7]	0x0	Software power down. 0: Active State 1: Power Down	
[8]	0x0	Software stand-by mode. 0: Active State 1: Stand-by Mode	

Address: 0x463		RW	Default: 0x0019
[0]	0x1	Enable clock receiver. 0: Disable 1: Enable	
[4:1]	0xc	Reserved.	
[7:5]	0x0	Clock RX divider control. 0: Bypass 1: Divide by 2 2: Divide by 3 3: Divide by 4 4: Divide by 5 5: Divide by 6 6: Divide by 7 7: Divide by 8	
[8]	0x0	Enable on-chip 100Ohm termination. 0: Disable 1: Enable	
[9]	0x0	Clock polarity control when DCS is enabled. 0: Disable 1: Invert	
[10]	0x0	Reserved.	

Address: 0x473		RW	Default: 0x0000
[4:0]	0x0	Reserved.	
[8:5]	0x0	Output data delay in parallel CMOS mode. The output data delay (250ps steps) with respect to the clock	
[9]	0x0	Launching output clock polarity in parallel CMOS mode. 0: Not inverted 1: Inverted	
[13:10]	0x0	Output clock delay. The output clock delay is increased by 250ps * (register value) with respect to the data	
[14]	0x0	Output clock polarity. 0: Not inverted 1: Inverted	

Address: 0x4b5		RW	Default: 0x18c0
[1:0]	0x0	Reserved.	
[5:2]	0x0	Output test mode select (see Table 16).	
[6]	0x1	Output test channel CH. A 0: Disable 1: Enable	
[7]	0x1	Output test channel CH. B 0: Disable 1: Enable	
[8]	0x0	Output test toggle mode. Toggle between user test pattern 0 and 1.	
[10:9]	0x0	Reserved.	
[11]	0x1	PN9 generator reset (active low).	
[12]	0x1	PN23 generator reset (active low).	
[13]	0x0	Enable the output data scrambler. 0: Disable 1: Enable	
[14]	0x0	Enable alternate bit polarity switch. 0: Disable 1: Enable	

Address: 0x501		RW	Default: 0x0003
[1:0]	0x3	Serial Mode Interface Setup: 0: 2's Complement CMOS Interface 1: Offset Binary CMOS Interface 2: 2's Complement DDR LVDS Interface 3: Offset Binary DDR LVDS Interface	

ADC A:

Address: 0xdc1		RW	Default: 0xbfff
[3:0]	0xf	Reserved.	
[4]	0x1	Calibration soft reset (active low).	
[15:5]	0x5f9	Reserved.	

See Table 12 for valid configurations for the following registers:

Address: 0xdcd		RW	Default: 0x1483
[2:0]	0x3	Stg1 calibration convergence speed in foreground mode (see Table 12).	
[11:3]	0x90	Reserved.	
[13:12]	0x1	Stg1 calibration randomization sequence in foreground mode (see Table 12).	

Address: 0xdd5		RW	Default: 0x1483
[2:0]	0x3	Stage 2 calibration convergence speed in foreground mode (see Table 12).	
[11:3]	0x90	Reserved.	
[13:12]	0x1	Stage 2 calibration randomization sequence in foreground mode (see Table 12).	

Address: 0xddd		RW	Default: 0x16c3
[2:0]	0x3	Stage 3 calibration convergence speed in foreground mode (see Table 12).	
[11:3]	0xd8	Reserved.	
[13:12]	0x1	Stage 3 calibration randomization sequence in foreground mode (see Table 12).	

Address: 0xde1		RW	Default: 0xbae8
[7:0]	0xe8	Time allocated for calibration (see Table 12).	
[8]	0x0	Enable calibration (see Table 12).	
[9]	0x1	Enable foreground calibration (see Table 12).	
[10]	0x0	Reserved.	
[11]	0x1	Enable stg1 calibration (see Table 12).	
[12]	0x1	Enable stage 2 calibration (see Table 12).	
[13]	0x1	Enable stage 3 calibration (see Table 12).	
[14]	0x0	Background calibration parallel mode (see Table 12).	
[15]	0x1	Disable background calibration mode for all stages (see Table 12).	

ADC B:

Address: 0xcc1		RW	Default: 0xbfff
[3:0]	0xf	Reserved.	
[4]	0x1	Calibration soft reset (active low).	
[15:5]	0x5f9	Reserved.	

See Table 12 for valid configurations for the following registers:

Address: 0xccd		RW	Default: 0x1483
[2:0]	0x3	Stg1 calibration convergence speed in foreground mode (see Table 12).	
[11:3]	0x90	Reserved.	
[13:12]	0x1	Stg1 calibration randomization sequence in foreground mode (see Table 12).	

Address: 0xcd5		RW	Default: 0x1483
[2:0]	0x3	Stage 2 calibration convergence speed in foreground mode (see Table 12).	
[11:3]	0x90	Reserved.	
[13:12]	0x1	Stage 2 calibration randomization sequence in foreground mode (see Table 12).	

Address: 0xcdd		RW	Default: 0x16c3
[2:0]	0x3	Stage 3 calibration convergence speed in foreground mode (see Table 12).	
[11:3]	0xd8	Reserved.	
[13:12]	0x1	Stage 3 calibration randomization sequence in foreground mode (see Table 12).	

Address: 0xce1		RW	Default: 0xbae8
[7:0]	0xe8	Time allocated for calibration (see Table 12).	
[8]	0x0	Enable calibration (see Table 12).	
[9]	0x1	Enable foreground calibration (see Table 12).	
[10]	0x0	Reserved.	
[11]	0x1	Enable stg1 calibration (see Table 12).	
[12]	0x1	Enable stage 2 calibration (see Table 12).	
[13]	0x1	Enable stage 3 calibration (see Table 12).	
[14]	0x0	Background calibration parallel mode (see Table 12).	
[15]	0x1	Disable background calibration mode for all stages (see Table 12).	

ADC BRING-UP

The SD4226 does not require a specific power-up sequence; however, it is recommended to apply the DRVDD first followed by the AVDD.

Initialization

Proper device initialization requires setting register *0x45d* to 0x1095. The SD4226 default output data interface configuration is CMOS, offset binary (see register *0x501*). To use the LVDS two's complement interface, set register *0x501* to 0x2.

ORDERING INFORMATION

Base Part No.	Orderable Part No. Full Tray	Orderable Part No. Tray with 50Pcs	Orderable Part No. Reel with 750pcs
SD4226-R12	SD4226-R12-A-QC9-TB	SD4226-R12-A-QC9-TA	SD4226-R12-A-QC9-RD

EVK	Part No.
CMOS	SD4226-R12-A-QC9-RD

This product is protected by several U.S. Patents (www.silannasemi.com/patents).

PACKAGE DRAWING

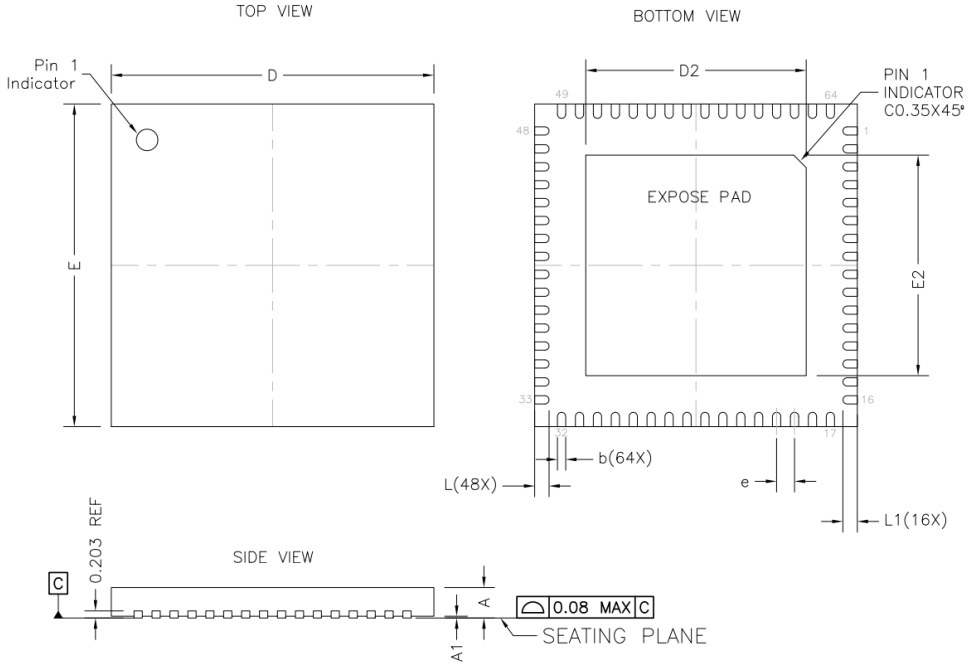

DIMENSION TABLE			
SYMBOL	MINIMUM	NOMINAL	MAXIMUM
A	0.70	0.75	0.80
A1	0.00	0.02	0.05
b	0.20	0.25	0.30
D	8.90	9.00	9.10
D2	6.10	6.15	6.20
E	8.90	9.00	9.10
E2	6.10	6.15	6.20
e	0.50 BSC		
L	0.35	0.40	0.45
L1	0.33	0.38	0.43

NOTE:
1. Dimensioning and tolerancing conform to ASME Y14.5–2009
2. All dimensions are in millimeters
3. N is the total number of terminals
4. Unilateral coplanarity zone applies to the exposed pas as well as the terminals
5. Lead Finish: 100% Sn

Figure 26: Package Dimensions.

APPENDIX A: Register Map

This section provides a comprehensive description of the complete register map, detailing all available control and status registers within the device.

0x400 - CHIP_TOP

Address: 0x455		RW	Default: 0x0001
[0]	0x1	Soft reset (active low).	

Address: 0x457		RW	Default: 0x0015
[0]	0x1	Duty Cycle Stabilizer enable (see Duty-Cycle Stabilizer). 0: Disable 1: Enable	
[1]	0x0	Duty Cycle Stabilizer on/off in SPI mode (see Duty-Cycle Stabilizer). 0: Off 1: On	
[6:2]	0x5	Reserved.	
[7]	0x0	Software power down. 0: Active State 1: Power Down	
[8]	0x0	Software stand-by mode. 0: Active State 1: Stand-by Mode	

Address: 0x45d		RW	Default: 0x0095
[0]	0x1	ADC reference voltage enable. 0: Disabled 1: Enabled	
[4:1]	0xa	ADC reference voltage value. 0: Lowest ... 15: Highest	
[11:5]	0x4	Reserved.	
[12]	0x0	Internal VREF Enable. 0: Disabled 1: Enabled	
[14:13]	0x0	Reserved.	

Address: 0x463		RW	Default: 0x0019
[0]	0x1	Enable clock receiver. 0: Disable 1: Enable	
[4:1]	0xc	Reserved.	
[7:5]	0x0	Clock RX divider control. 0: Bypass 1: Divide by 2 2: Divide by 3 3: Divide by 4 4: Divide by 5 5: Divide by 6 6: Divide by 7 7: Divide by 8	
[8]	0x0	Enable on-chip 100Ohm termination. 0: Disable 1: Enable	
[9]	0x0	Clock polarity control when DCS is enabled. 0: Disable 1: Invert	
[10]	0x0	Reserved.	

Address: 0x467		RW	Default: 0x3850
[0]	0x0	Reserved.	
[1]	0x0	LVDS reduced swing mode. 0: Disable 1: Enable	
[5:2]	0x4	Reserved.	
[6]	0x1	LVDS bias enable. 0: Disable 1: Enable	
[10:7]	0x0	Reserved.	
[13:11]	0x7	LVDS amplitude. 0: Smallest amplitude 0: ... 7: Largest amplitude	
[15:14]	0x0	Reserved.	

Address: 0x473		RW	Default: 0x0000
[4:0]	0x0	Reserved.	
[8:5]	0x0	Output data delay in parallel CMOS mode. The output data delay (250ps steps) with respect to the clock	
[9]	0x0	Launching output clock polarity in parallel CMOS mode. 0: Not inverted 1: Inverted	
[13:10]	0x0	Output clock delay. The output clock delay is increased by 250ps * (register value) with respect to the data	
[14]	0x0	Output clock polarity. 0: Not inverted 1: Inverted	

Address: 0x475		RW	Default: 0x0001
[0]	0x1	Enable VCM. 0: Disable 1: Enable	

Address: 0x4b5		RW	Default: 0x18c0
[1:0]	0x0	Reserved.	
[5:2]	0x0	Output test mode select (see Table 16).	
[6]	0x1	Output test channel CH. A 0: Disable 1: Enable	
[7]	0x1	Output test channel CH. B 0: Disable 1: Enable	
[8]	0x0	Output test toggle mode. Toggle between user test pattern 0 and 1.	
[10:9]	0x0	Reserved.	
[11]	0x1	PN9 generator reset (active low).	
[12]	0x1	PN23 generator reset (active low).	
[13]	0x0	Enable the output data scrambler. 0: Disable 1: Enable	
[14]	0x0	Enable alternate bit polarity switch. 0: Disable 1: Enable	

Address: 0x4b7		RW	Default: 0x0092
[15:0]	0x0092	PN9 initial seed.	

Address: 0x4b9		RW	Default: 0x3aff
[15:0]	0x3aff	PN23 initial seed.	

Address: 0x4bb		RW	Default: 0x0000
[15:0]	0x0000	User test pattern 0 (CH. A).	

Address: 0x4bd		RW	Default: 0x0000
[15:0]	0x0000	User test pattern 1 (CH. A).	

Address: 0x4bf		RW	Default: 0x0000
[15:0]	0x0000	User test pattern 0 (CH. B).	

Address: 0x4c1		RW	Default: 0x0000
[15:0]	0x0000	User test pattern 1 (CH. B).	

Address: 0x4c9		RW	Default: 0x0000
[0]	0x0	Disable auto-recalibration. 0: Disable 1: Enable	
[15:1]	0x0	Reserved.	

Address: 0x4cf		RW	Default: 0x0035
[14:0]	0x35	Reserved.	
[15]	0x0	Disable production test mode. 0: Test mode enabled 1: Test mode disabled	

Address: 0x4d3		RW	Default: 0x0007
[3:0]	0x7	LVDS common mode voltage.	
[7:4]	0x0	Reserved.	

Address: 0x4fd	RO	Default: N/A
[2:0]	Chip revision.	
[6:3]	Label ID.	
[8:7]	Reserved.	
[10:9]	Resolution ID for device 0: 10-bit 1: 12-bit 2: 14-bit 3: 16-bit	
[13:11]	Speed ID for device.	

Address: 0x4ff	RO	Default: N/A
[0]	Reserved.	
[1]	Analog Supply Ready. 0: Not ready 1: Ready	
[2]	Digital Supply Ready.	
[3]	I/O Supply Ready. 0: Not ready 1: Ready	
[4]	Reserved.	
[5]	SPI enabled. 0: Not enabled 1: Enabled	
[10:6]	Reserved.	

Address: 0x501		RW	Default: 0x0003
[1:0]	0x3	Serial Mode Interface Setup: 0: 2's Complement CMOS Interface 1: Offset Binary CMOS Interface 2: 2's Complement DDR LVDS Interface 3: Offset Binary DDR LVDS Interface	

0xF00 - ADC_DUAL

Address: 0x809		RW	Default: 0x1800
[11:0]	0x800	A/Q channel gain. 0x000: 0.0 0x800: 1.0 0xfff: 2.0	
[12]	0x1	Enable A/Q path gain and offset.	

Address: 0x80b		RW	Default: 0x1800
[11:0]	0x800	B/I channel gain. 0x000: 0.0 0x800: 1.0 0xfff: 2.0	
[12]	0x1	Enable B/I path gain and offset.	

Address: 0x80d		RW	Default: 0x0000
[15:0]	0x0000	A/Q channel offset. Signed 16-bit two's complement number.	

Address: 0x80f		RW	Default: 0x0000
[15:0]	0x0000	B/I channel offset. Signed 16-bit two's complement number.	

Address: 0xf03		RW	Default: 0x07f9
[0]	0x1	Enable top level bias. 0: Disable 1: Enable	
[2:1]	0x0	Reserved.	
[3]	0x1	ADC_B enable. 0: Disable 1: Enable	
[4]	0x1	ADC_A enable. 0: Disable 1: Enable	
[10:5]	0x3f	Mask for enable pin.	

Address: 0xf05		RW	Default: 0x0030
[5:0]	0x30	Mask for stand-by pin.	
[6]	0x0	Stand-by ADC_B. 0: Disable 1: Enable	
[7]	0x0	Stand-by ADC_A. 0: Disable 1: Enable	

Address: 0xf07		RW	Default: 0x0043
[0]	0x1	Digital clock enable. 0: Disable 1: Enable	
[1]	0x1	Analog clock enable. 0: Disable 1: Enable	
[2]	0x0	Reserved.	
[3]	0x0	Clock source select. 0: ADC_B 1: ADC_A	
[5:4]	0x0	Reserved.	
[6]	0x1	ADC clock generator reset (active low).	
[7]	0x0	Reserved.	

Address: 0xf11		RW	Default: 0x000b
[2:0]	0x3	Reserved.	
[4:3]	0x1	VCM voltage control. 0: Lowest common-mode voltage ... 3: Highest common-mode voltage	

0xDC0 - ADC A

Address: 0xdc1		RW	Default: 0xbfff
[3:0]	0xf	Reserved.	
[4]	0x1	Calibration soft reset (active low).	
[15:5]	0x5f9	Reserved.	

Address: 0xdc9		RW	Default: 0x06a5
[8:0]	0xa5	Reserved.	
[9]	0x1	Stg1 enable background mode.	
[11:10]	0x1	Reserved.	

Address: 0xdcd		RW	Default: 0x1483
[2:0]	0x3	Stg1 calibration convergence speed in foreground mode (see Table 12).	
[11:3]	0x90	Reserved.	
[13:12]	0x1	Stg1 calibration randomization sequence in foreground mode (see Table 12).	

Address: 0xdcf		RW	Default: 0x0d85
[2:0]	0x5	Stg1 calibration convergence speed in background mode (see Table 12).	
[11:3]	0x1b0	Reserved.	

Address: 0xdd1		RW	Default: 0x02a5
[0]	0x1	Stage 2 gain error calibration enable.	
[1]	0x0	Stage 2 gain error calibration only.	
[8:2]	0x29	Reserved.	
[9]	0x1	Stage 2 enable background mode.	
[11:10]	0x0	Reserved.	

Address: 0xdd3		RW	Default: 0x0bc0
[0]	0x0	Stage 2 force calibration data.	
[3:1]	0x0	Stage 2 calibration data register.	
[6:4]	0x4	Stage 2 bg calibration data register.	
[9:7]	0x7	Stage 2 fg calibration data register.	
[11:10]	0x2	Stage 2 calibration mode.	
[14:12]	0x0	Stage 2 capacitor select register.	
[15]	0x0	Stage 2 cal data magnitude.	

Address: 0xdd5		RW	Default: 0x1483
[2:0]	0x3	Stage 2 calibration convergence speed in foreground mode (see Table 12).	
[11:3]	0x90	Reserved.	
[13:12]	0x1	Stage 2 calibration randomization sequence in foreground mode (see Table 12).	

Address: 0xdd7		RW	Default: 0x0001
[2:0]	0x1	Stage 2 calibration convergence speed in background mode (see Table 12).	
[11:3]	0x0	Reserved.	

Address: 0xddd		RW	Default: 0x16c3
[2:0]	0x3	Stage 3 calibration convergence speed in foreground mode (see Table 12).	
[11:3]	0xd8	Reserved.	
[13:12]	0x1	Stage 3 calibration randomization sequence in foreground mode (see Table 12).	

Address: 0xde1		RW	Default: 0xbae8
[7:0]	0xe8	Time allocated for calibration (see Table 12).	
[8]	0x0	Enable calibration (see Table 12).	
[9]	0x1	Enable foreground calibration (see Table 12).	
[10]	0x0	Reserved.	
[11]	0x1	Enable stg1 calibration (see Table 12).	
[12]	0x1	Enable stage 2 calibration (see Table 12).	
[13]	0x1	Enable stage 3 calibration (see Table 12).	
[14]	0x0	Background calibration parallel mode (see Table 12).	
[15]	0x1	Disable background calibration mode for all stages (see Table 12).	

Address: 0xde3		RW	Default: 0x0008
[2:0]	0x0	Reserved.	
[3]	0x1	Clipping control to reserve some headroom for background calibration signals (active low).	

Address: 0xdeb		RW	Default: 0x0000
[0]	0x0	Calibration status. 0: Not done 1: Done	
[7:1]	0x0	Reserved.	

Address: 0xdef	RO	Default: N/A
[0]	Calibration complete.	
[15:1]	Reserved.	

0xCC1 - ADC B

Address: 0xcc1		RW	Default: 0xbfff
[3:0]	0xf	Reserved.	
[4]	0x1	Calibration soft reset (active low).	
[15:5]	0x5f9	Reserved.	

Address: 0xcc9		RW	Default: 0x06a5
[8:0]	0xa5	Reserved.	
[9]	0x1	Stg1 enable background mode.	
[11:10]	0x1	Reserved.	

Address: 0xccd		RW	Default: 0x1483
[2:0]	0x3	Stg1 calibration convergence speed in foreground mode (see Table 12).	
[11:3]	0x90	Reserved.	
[13:12]	0x1	Stg1 calibration randomization sequence in foreground mode (see Table 12).	

Address: 0xccf		RW	Default: 0x0d85
[2:0]	0x5	Stg1 calibration convergence speed in background mode (see Table 12).	
[11:3]	0x1b0	Reserved.	

Address: 0xcd1		RW	Default: 0x02a5
[0]	0x1	Stage 2 gain error calibration enable.	
[1]	0x0	Stage 2 gain error calibration only.	
[8:2]	0x29	Reserved.	
[9]	0x1	Stage 2 enable background mode.	
[11:10]	0x0	Reserved.	

Address: 0xcd5		RW	Default: 0x1483
[2:0]	0x3	Stage 2 calibration convergence speed in foreground mode (see Table 12).	
[11:3]	0x90	Reserved.	
[13:12]	0x1	Stage 2 calibration randomization sequence in foreground mode (see Table 12).	

Address: 0xcd7		RW	Default: 0x0001
[2:0]	0x1	Stage 2 calibration convergence speed in background mode (see Table 12).	
[11:3]	0x0	Reserved.	

Address: 0xcdd		RW	Default: 0x16c3
[2:0]	0x3	Stage 3 calibration convergence speed in foreground mode (see Table 12).	
[11:3]	0xd8	Reserved.	
[13:12]	0x1	Stage 3 calibration randomization sequence in foreground mode (see Table 12).	

Address: 0xce1		RW	Default: 0xbae8
[7:0]	0xe8	Time allocated for calibration (see Table 12).	
[8]	0x0	Enable calibration (see Table 12).	
[9]	0x1	Enable foreground calibration (see Table 12).	
[10]	0x0	Reserved.	
[11]	0x1	Enable stg1 calibration (see Table 12).	
[12]	0x1	Enable stage 2 calibration (see Table 12).	
[13]	0x1	Enable stage 3 calibration (see Table 12).	
[14]	0x0	Background calibration parallel mode (see Table 12).	
[15]	0x1	Disable background calibration mode for all stages (see Table 12).	

Address: 0xce3		RW	Default: 0x0008
[2:0]	0x0	Reserved.	
[3]	0x1	Clipping control to reserve some headroom for background calibration signals (active low).	

Address: 0xceb		RW	Default: 0x0000
[0]	0x0	Calibration status. 0: Not done 1: Done	
[7:1]	0x0	Reserved.	

Address: 0xcef	RO	Default: N/A
[0]	Calibration complete.	
[15:1]	Reserved.	

REVISION HISTORY

Version	Date	Comment
1.0	April 9, 2026	Initial Release.
2.0	October 12, 2026	Genaral QA improvements.

Silanna Semiconductor Proprietary and Confidential

Information furnished by Silanna Semiconductor is believed to be accurate and reliable. However, no responsibility is assumed for its use. Silanna Semiconductor makes no representation that the interconnection of its circuits as described herein will not infringe on existing patents rights. Specifications subject to change without notice.